California Polytechnic State University Pomona
DEPARTMENT OF ELECTRICAL & COMPUTER ENGINEERING

Circuit Analysis 2 Laboratory

ECE 2101L-03
Report #4

Op-amp in AC circuits

Prepared by
Kevyn Santos & Kaung Nyi Naing

Presented to
Sasoun Torousian

February 15, 2024

Introduction

In this lab, we will be analyzing the characteristics of an operational amplifier within different AC circuits. We will calculate the RMS (root mean squared) values of our source and initial voltages prior to measuring so that we have a baseline for what our data should look like. We will also review the datasheet of our operational amplifier, LM741, so that we know how to build our circuits properly. In the second half of the lab, we will analyze how a resistor and capacitor in parallel affect our operational amplifier circuit.

A. Pre-lab section

Task A1 Op amp LM 741

1) The Pin-out diagram of Op-amp LM 741 with pin/node numbers, op-amp circuit diagram, and the functions.

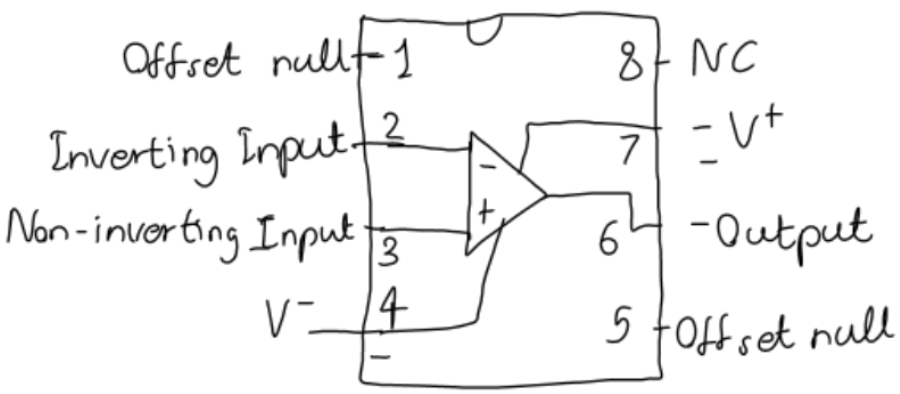

Fig. 4 Pin-out diagram of Op-amp LM 741

2) Specification of LM741
   a) The supply voltage rating of LM741: ±22 V
   b) The input voltage rating of LM741: ±15V
   c) The differential input voltage rating of LM741: ±30V

Task A2 **Voltage and current relation in op amp circuit**

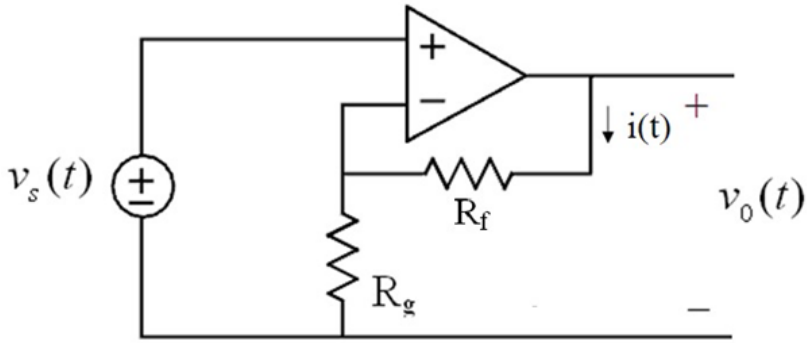

Fig. 1 Op amp circuit for Task A2

1) The output voltage $v_0(t)$: V0(t)=(Rf/Rg+1)*Vs(t)

   The current i(t): i(t)=V0(t)/(Rf+Rg)

2) The gain G=V0(t)/Vs(t)=1+Rf/Rg

B. Lab section

B1. Experiment 1: Basic characteristics of **non-inverting positive-gain** op amp circuit

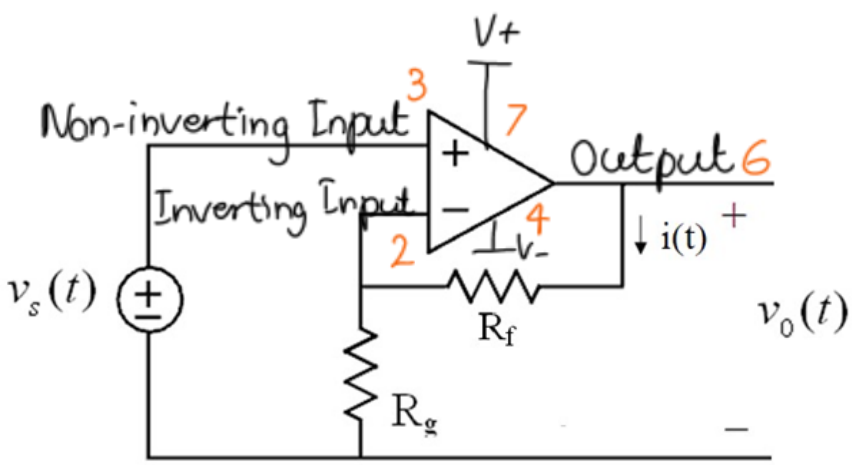

Fig. 2 Circuit for Experiment B1 Redrawn Showing Pin Numbers & Functions

All partners: R_g = 1 kΩ, R_f = 3.3 kΩ $v_s(t)$ = 2sin(2π60t)

Gain of this circuit: **G=1+Rf/Rg**

Table 1 Results for Experiment B1

R_f, k	Calc V_0 RMS, V	Calc. gain G	Meas V_s, RMS, V	Meas V_0, RMS, V	Meas I RMS, A	Meas gain, $G=V_0$meas /Vsmeas	Error Gain, %
3.3	6.0811	4.3	1.416	6.104	1.423m	4.311	-0.26%

Question:

Explain why you have the gain error and why the current behaves the way shown by the measurement.

There is a gain error because there might be some tolerance errors in the resistors that we used. For example, our 3.3k resistor might be bigger (3.38k) than stated thus our measured gain might be bigger than our calculated gain.

The current i(t) is the same over both Rf and Rg because there is no current going into the op-amp at the inverting and non-inverting inputs. We can confirm this by doing KCL at the non-inverting input node. Thus we can calculate and measure at any point along the two resistors to get the current i(t).

Simulation:

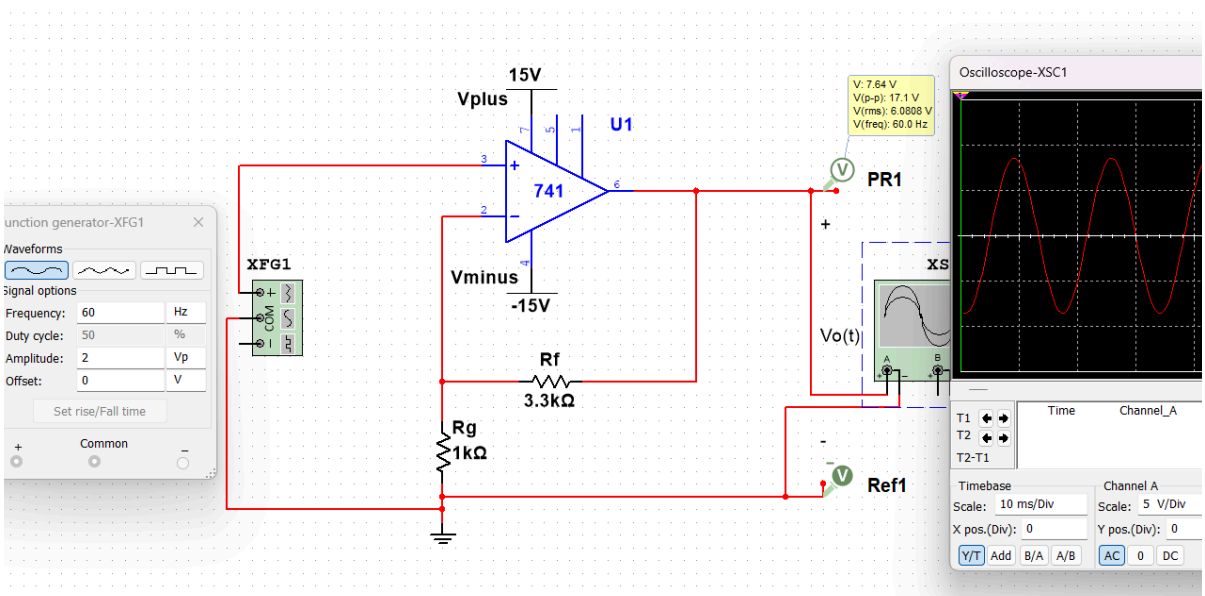

Fig. 5 Simulation Results of Non-inverting Positive-gain Op-amp Circuit

PCB Design:

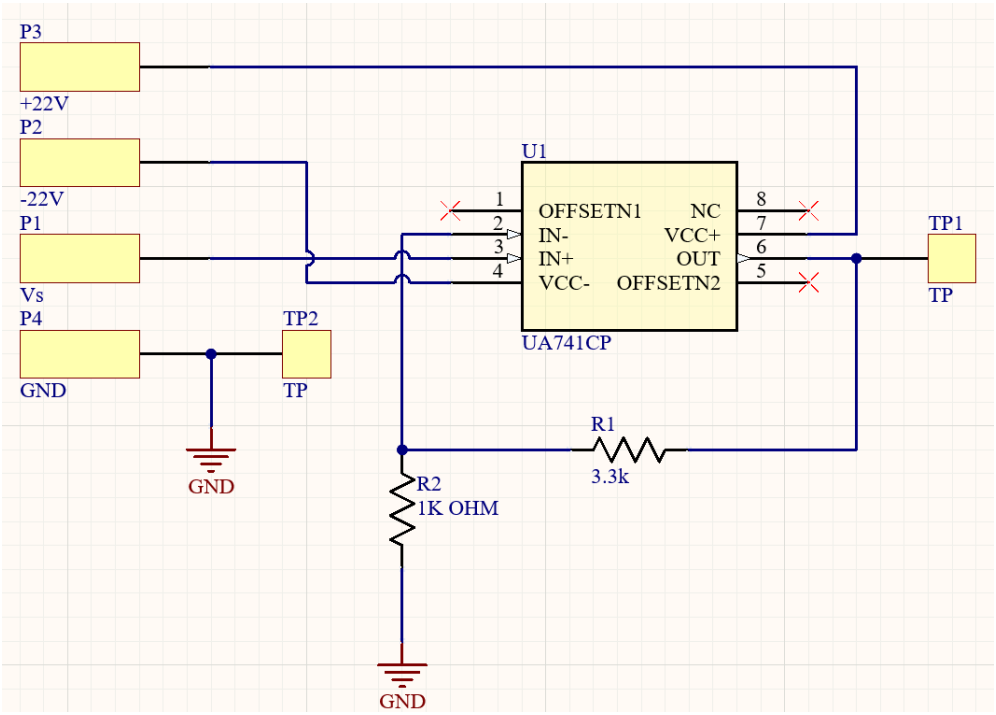

Fig. 6 Schematic Design of Non-inverting Positive-gain Op-amp Circuit

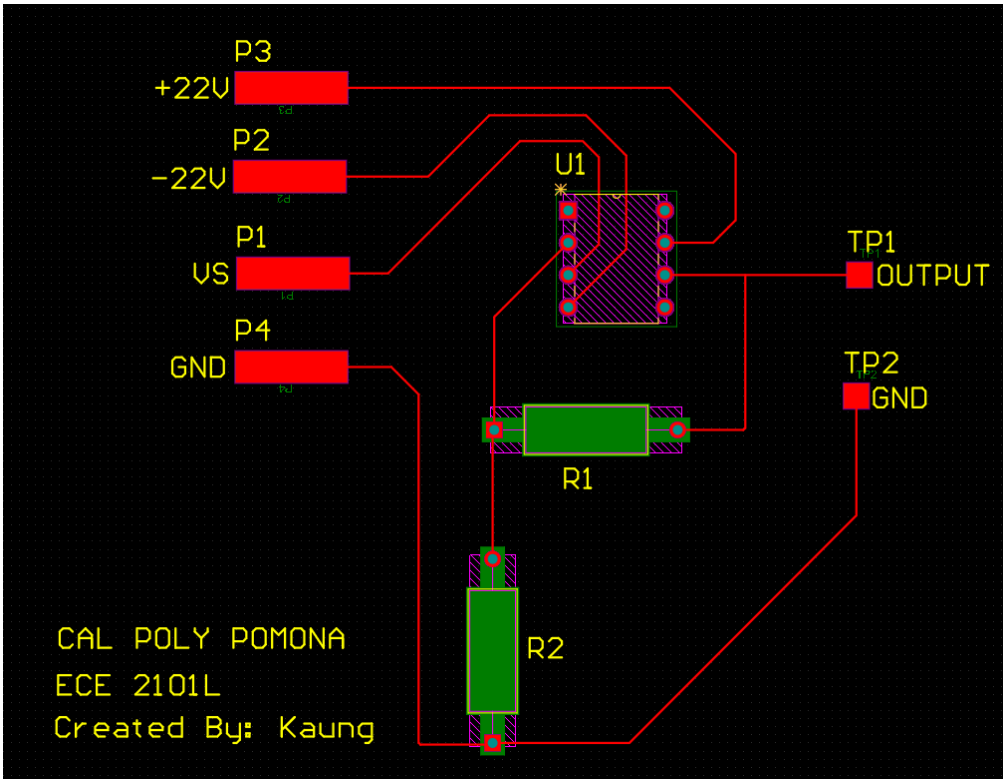

Fig. 7 PCB 2D Design of Non-inverting Positive-gain Op-amp Circuit

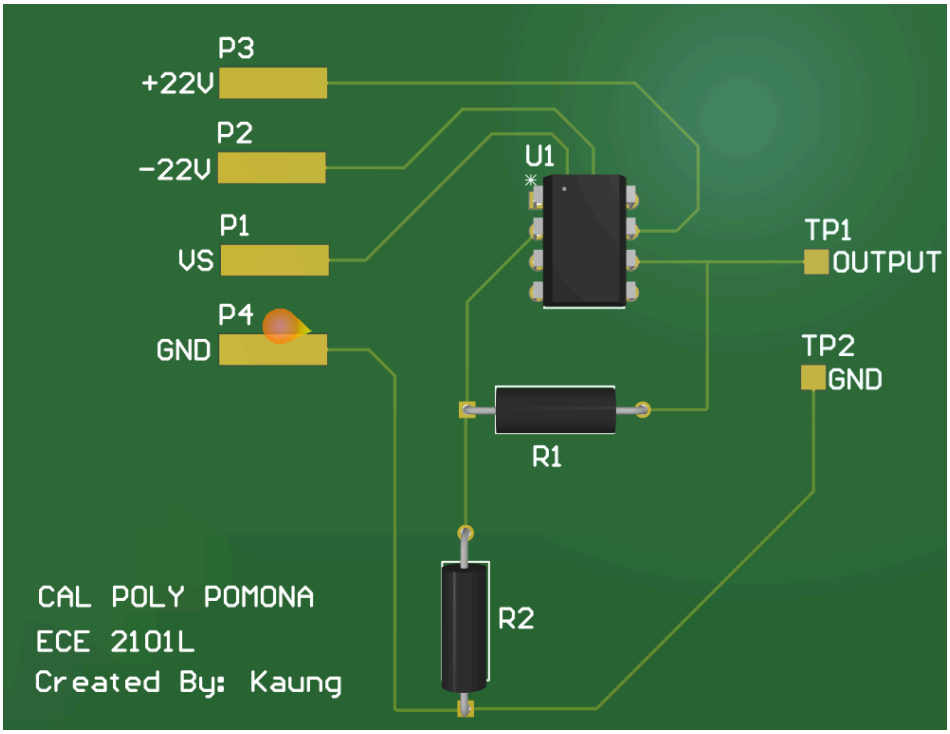

Fig. 8 PCB 3D Design of Non-inverting Positive-gain Op-amp Circuit

B2. Experiment 2: Complex gain of inverting op amp circuit

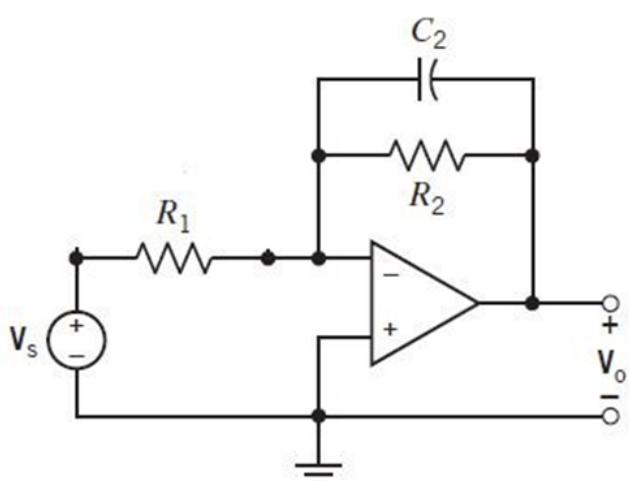

Fig. 3 Circuit for Experiment B2

$v_s(t) = 2\sin(2\pi 120t)$, $R_1 = 1\ k\Omega$, $C_2 = 0.1\ \mu F$ $R_2 = 3.3\ k\Omega$

Gain for the circuit:

$$G = \frac{V_0}{V_s} = -\frac{Z_2}{Z_1}$$

where Z_1=R_1 and Z_2 results from the parallel combination of resistor R_2 and capacitor C_2.

Table 2 Results for Experiment B2

Calc. gain G		Calc. V_0 RMS		Measured V_0, RMS		Error V_0 %	Error V_0 %
Magnitude	***Angle, deg.***	***Mag., V***	***Angle, deg.***	***Mag., V***	***Angle, deg.***	***Magnitude***	***Angle***
3.2024	166.0277	4.5288	166.0277	4.234	165	6.51%	0.62%

Question:

Propose a change to the circuit in Fig. 3 to increase the phase shift between the source voltage and the output voltage by at least 10 degrees from what you have obtained with the original circuit. What do you change? What is the increase in the phase shift you achieve with the change?

We can use a smaller capacitor, such as a 0.01uF capacitor, in order to increase the phase shift between the Vo and Vs. If this change is implemented, the Vo rms would be 6.598 ∟ 178.5747° instead of 4.5288 ∟ 166.0277°. Thus increasing the phase shift by more than 10 degrees. We notice that decreasing the resistor R2 to 1k Ohms will have similar effects and that the magnitude for the Vo rms is changed in the processes as well.

Simulation:

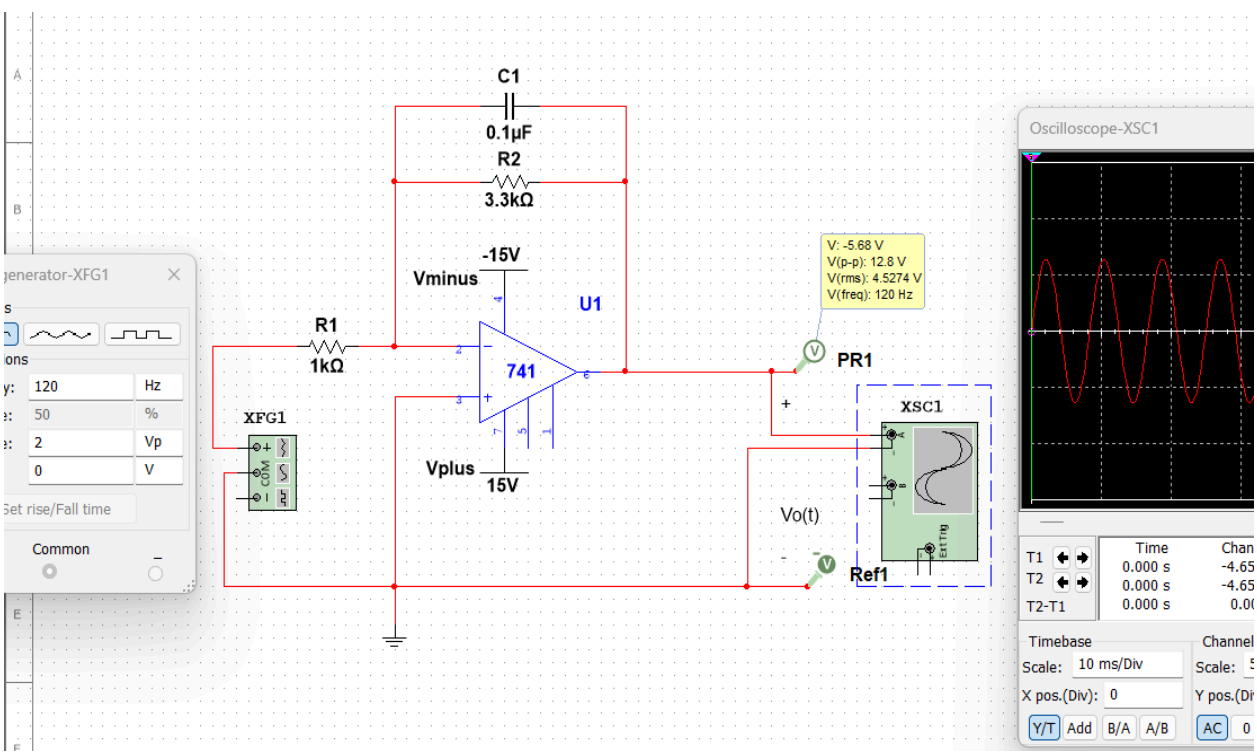

Fig. 9 Simulation Results of Inverting Complex-gain Op-amp Circuit

PCB Design:

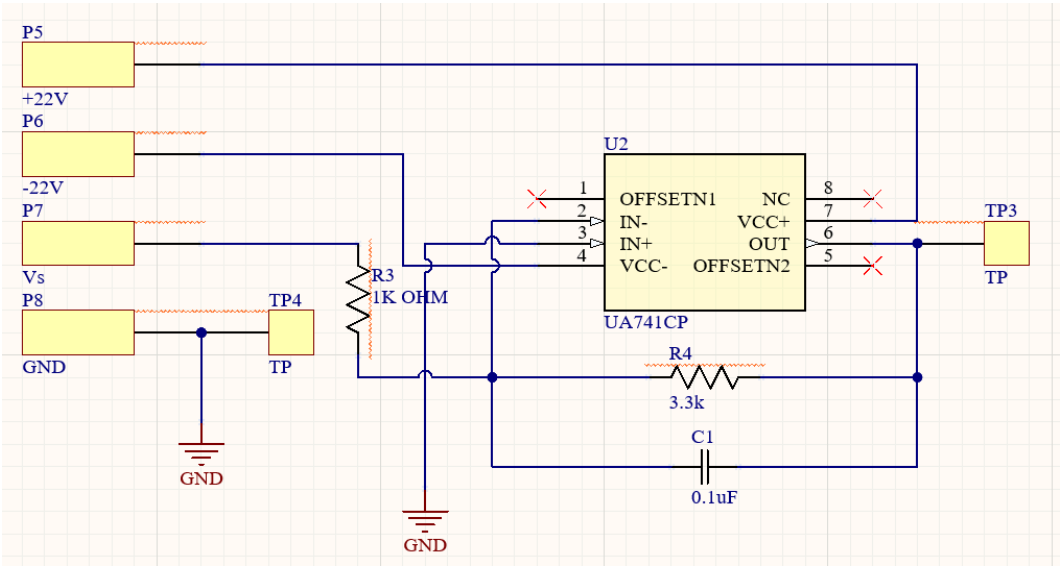

Fig. 10 Schematic Design of Inverting Complex-gain Op-amp Circuit

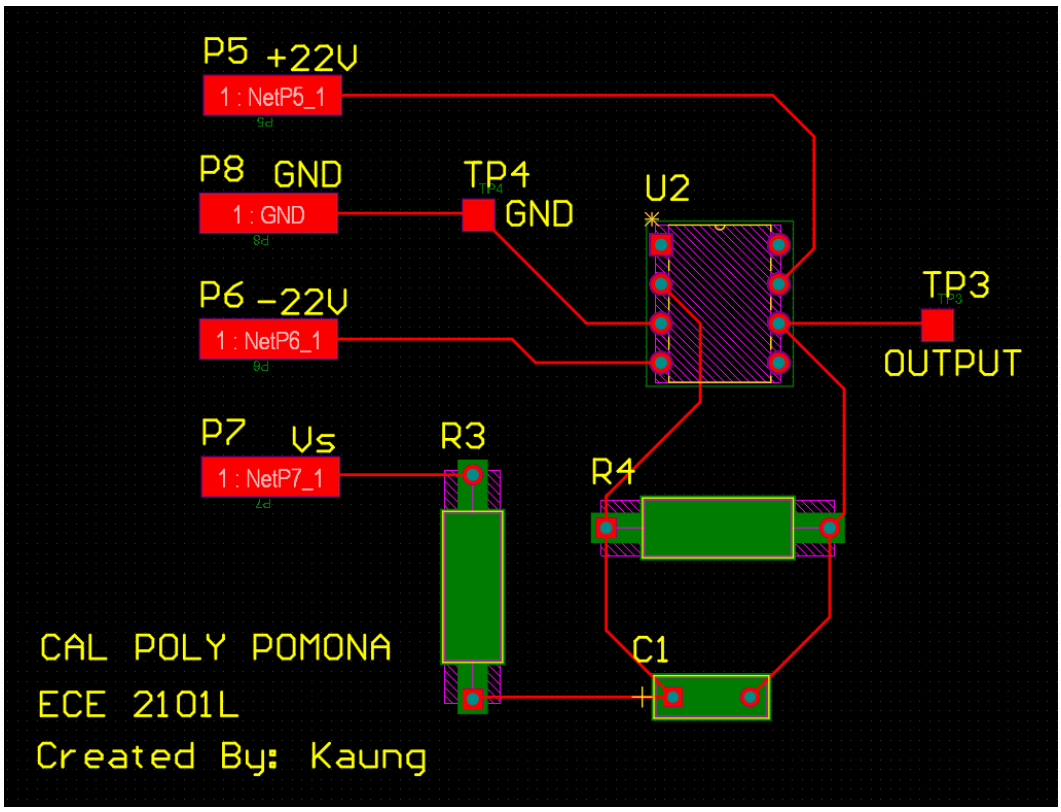

Fig. 11 PCB 2D Design of Inverting Complex-gain Op-amp Circuit

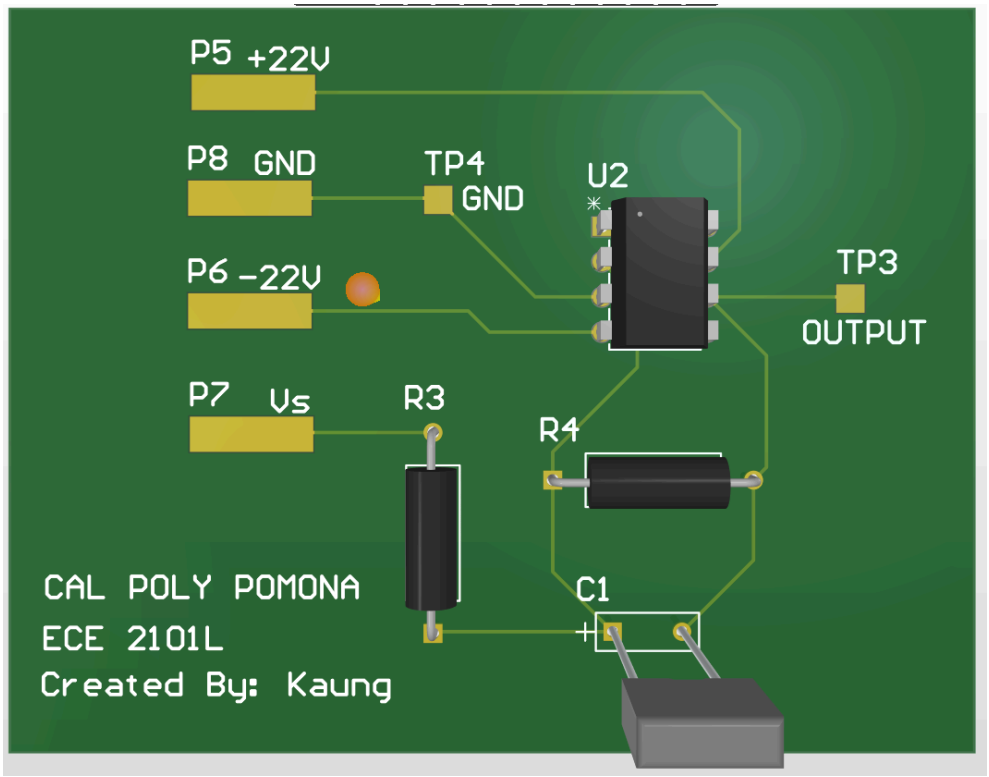

Fig. 12 PCB 3D Design of Inverting Complex-gain Op-amp Circuit

Conclusion:

In this lab, we first reviewed operational amplifier techniques learned in ECE 1101. It was very important that we read the datasheet for the LM741 so that we know our voltage ratings as well as the outputs and inputs. We were able to calculate our initial voltage, current, and gain through analysis techniques which gave us our simplified equations. Using our experience from previous lab experiments we set up our power supply, function generator, and oscilloscope to read measurements such as phase angle and RMS value of initial voltage. In our second circuit, our gain equation differed due to there being a resistor and capacitor in parallel. The frequency was also much faster which made our results differ from the first circuit. Overall, this lab provided us with the necessary skills to analyze the characteristics of operational amplifier circuits.